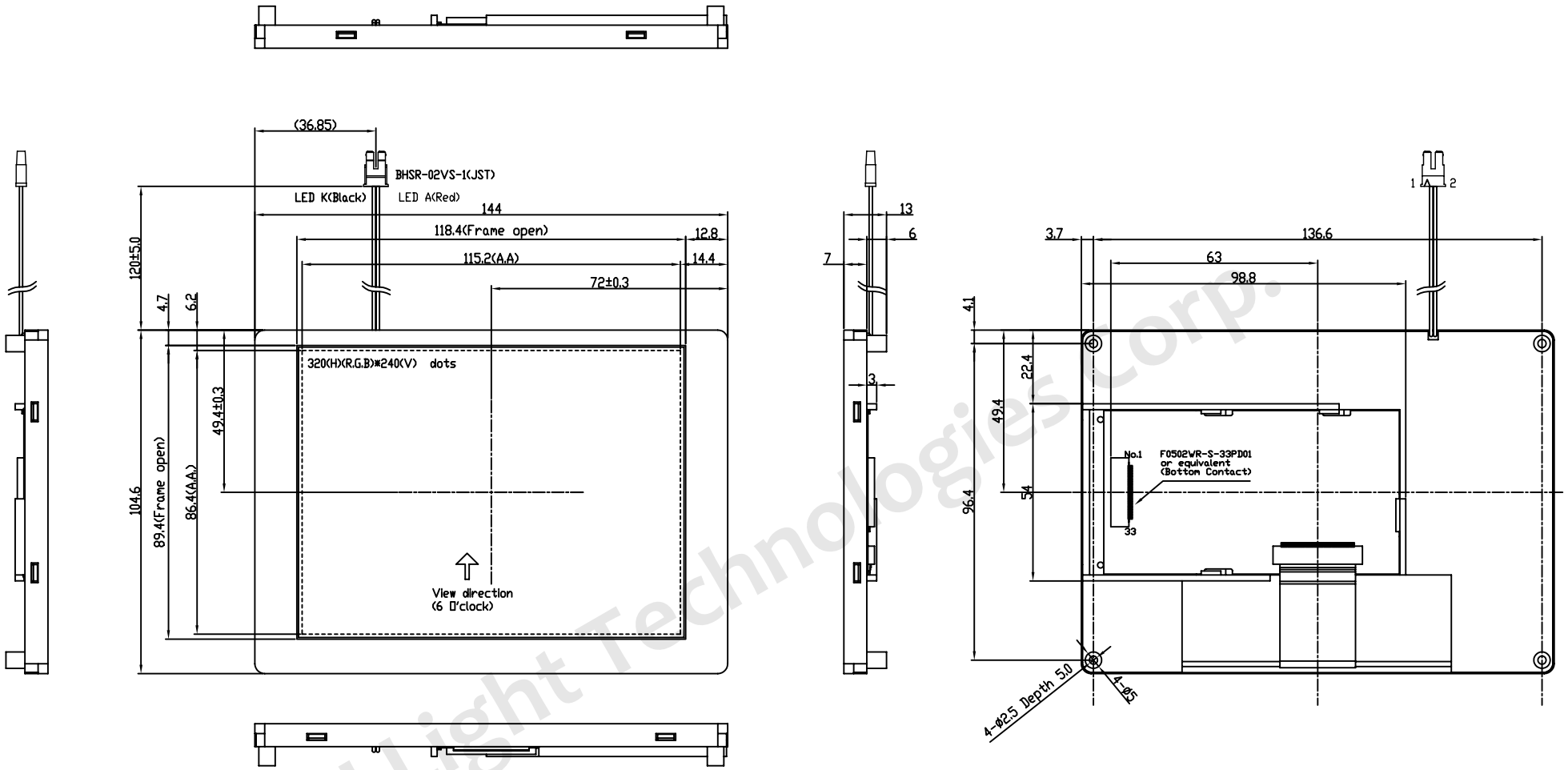

PIN ASSIGNMENT:

1.DGND	11.R5	21.B1	31.UDC
2.DCLK	12.GND	22.B2	32.NC
3.HSYNC	13.G0	23.B3	33.GND
4.VSYNC	14.G1	24.B4	
5.GND	15.G2	25.B5	
6.R0	16.G3	26.GND	
7.R1	17.G4	27.DEN	
8.R2	18.G5	28.VDD	
9.R3	19.GND	29.VDD	
10.R4	20.B0	30.LRC	

優潔光科技股份有限公司 UJ Light Technologies Corporation		MODEL NO.	UTF057_TP02-01	TYPE	Assembly		
		PART NO.	5.7" QVGA TFT	MATERIAL	NA		
APPROVAL / DATE	UJL / 2023.12.28	VERSION	Reference Only	SURFACE	NA		
CHECK / DATE	UJL / 2023.12.28		UNIT	mm	TOL. UNLESS NOTED.		±0.2
DRAW / DATE	UJL / 2023.12.28		SCALE	1/1	SHEET	1	OF 1

UJ Light Technologies Corp.